Programmable controllers TMM® xxxx – 3, *Z-series Race Boat* *(Version 5.7x and higher)*

Controllers TMM® xxxx – 3, *Z-series RB* are unique outstanding programmable controllers for brushless sensorless motors (BLCD motors). **These controllers maybe connected with a measuring device – Black Box BB-03 module – by CC_01 cable.**

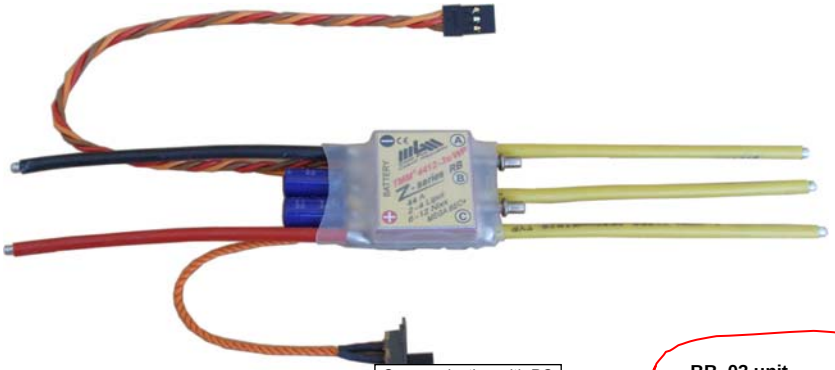

It measures and saves all important data of your drive (batteries – controller – motor – propeller) during flight, thus real values in operation, not static values measured on a test bench. This allows the user not only to optimize the power unit but also to determine mutual dependencies such as dependence of current on propeller, efficiency of drive on propeller, efficiency of timing, real power consumption of the drive, power consumption depending on type of cells (their hardness), etc.

It is a powerful device for determining the real load of BEC during operation of the model (it is the end of absurd evaluations with 300% error leading to destruction of BEC or the model).

After the flight the saved data are transferred to PC using USBCOM module, where they can be evaluated. Length of recording is more than 13 minutes. Data are represented in graphs, as well as in excel tables which may be further processed. For details on connection to BB_03, control, graph plotting, etc., see manual for BB_03.

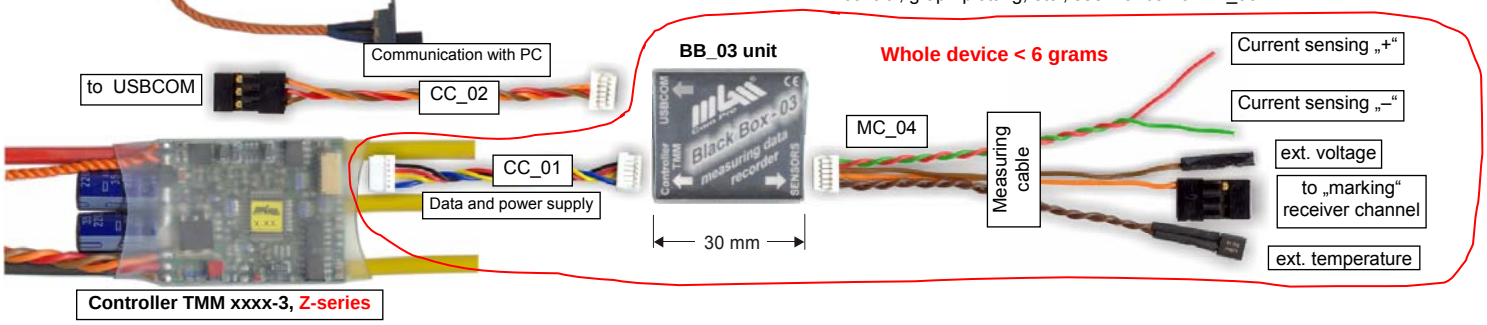

BB_03 together with TMM xxxx-3, *Z-series* controllers measures and saves (and display on the PC) each 100 ms these values:

Programming also by **UNICARD** →

- voltage of feeding battery under load (in current pulses)
- current drawn from the feeding battery
- motor input
- voltage of BEC
- current of BEC
- BEC power losses
- absorbed charge during flight [Ah]
- motor / propeller revolutions
- throttle stick position
- temperature of the controller
- temperature of batteries, motor, …(external sensor)
- any receiver channel (or event marking), start of saving data
- external voltage (0 up to +5V) with an additional resistor 24kΩ, voltage +25V with different resistor or more

Controllers TMM xxxx-3, *Z-series* are ready for immediate use, no programming necessary and working without BB_03 also. However, if you wish to set some parameters you may do so through a **very simple process using transmitter, programming card UNICARD or PC**. Programmed parameters are saved permanently.

If PC is used to program the controller, it is necessary to use the USBCOM / USBCOM+ with corresponding SW. The controller is connected using CC_02 with the USBCOM or UNICARD. It is plugged in special **ICS** connector which is a part of the controller. **In this case it is not necessary to disconnect the controller from the receiver each time which significantly simplifies the whole process.** (It is also possible to read-out some data from the controller – max. average current during flight, peak current,…). The controller may also be programmed when connected with BB-03. In this case the USBCOM(+) is connected with CC-02 into BB_03 instead of the controller.

They are manufactured with the use of surface mounting from high-end components and are controlled by a very powerful processor.

Thanks to the high-tech TMM® technology of MGM compro controllers feature number of outstanding properties which considerably eliminate the possibility of unwanted damage or destroy of motor, batteries and controller itself. Controllers also ensure the maximal efficiency with different kinds of motors. The revolution regulation is extremely fine - 1024 steps all the way to the full throttle. Starting is very fine. The MEGA BEC or switching S_BEC circuit (applies to versions with BEC) is also extremely powerful. All controllers are Lipol compatible and watch over their minimal voltage.

Maximum attention is paid to development which is in a continuous progress. To make our newest knowledge available to our customers SW is upgraded for free (only shipping costs are charged).

The quality of products is under constant supervision in manufacture. Every controller goes through numerous tests. The final test of each controller is done under the controller's full load.

Fast and easy to water:

To ensure correct type of the controller for each set (batteries, motor and propeller) it is best to measure (recommended is a clamp A-meter) current drawn from batteries when connected to the motor with propeller. It is necessary to carry out the measurement with the „hardest“ batteries intended for use in this set. This will prevent problems that might occur when the controller is overloaded (and batteries and motor as well). Remember to ensure proper cooling of the controller, especially when working near limit parameters. If you need to have power wires to battery longer than 30cm is it necessary to solder additional capacitors (same as in the controller) as close to controller (to + and – wires of the controller) as possible. They must be „very low ESR“, 105°C. For more info see www.mgm-compro.cz technical advice section.

It is not possible to control more than one motor with one controller.

1) How to connect the controller:

- Opposite piece of the connector, which is on your accumulators, should be soldered to the leading-in conductors to the accumulator. Use only quality golden plated kinds. Recommend are MP JET 2.5, 3.5 or 5 mm acorrding to the type of controller and current. It is also possible to use golden plated controllers ∅ 4mm, or Schulze 3.5 mm (connectors are not interchangeable). MP JET connectors feature smaller transient resistance and also smaller dimensions. We recommend to put socket on the "-" wire *(black wire)* of the controller and the plug on the "+" wire *(red wire)*.

To the Battery

To the Motor

- Receiver and antenna should be placed as far as possible from the controller, the batteries and power leads. Antenna should be placed as far as possible from lead strings and cable to tail.
- **NOTICE, reversal of poles on wires to the batteries will destroy the controller !** (This however, may not show immediately, but in some later starts or flights)
- The leads to the motor *(yellow wires marked "A", "B", "C")* should be soldered directly to the motor or it is also possible to use the connectors mentioned above. If you decide to use connectors, this time solder sockets to the controller leads !
  Short cut of these wires together (when batteries are connected) or short cut of these wires to the feeding voltage results in damage or destroy of the controller !
- After the connectors are soldered it is necessary to isolate them, for example with heat shrinking sleeve !
- Use power conductors as short as possible – it is better for minimum weight and for minimum interference

- Connect the controller to throttle channel on the transmitter ! **For OPTO version controllers, receiver must be fed from a separate battery. DO NOT take out the middle core of servoconnector (red wire) when using OPTO version controllers.**
- If motor runs in an opposite direction than desired, swap any two motor phases or change the revolution direction in the program setting on PC (the PC change is available only for EXPERT controllers, not expert LT).
- **It is necessary to cool the controller in operation with flowing air. Do not prevent the cooling air to get to the controller (e.g. by packing it in foam).**
- The controller informs about overload and overheating acoustically (motor beeping) and also through LED.
- **It is not allowed to feed the controller from any other source (such as mains power supply) than specified types of accumulators!!!**
- The switch of the controller is connected in such way that even if it gets damaged the BEC will be still functioning.
  The controller is switched on by TURNING OFF the switch (applies to "s" version with switch) or by connecting batteries (applies to versions without switch).
- **Do not switch off or disconnect the controller from batteries when motor runs or when it is still turning – that may lead to damage or destroyed of controller !!!**

Connection of the controller to RC equipment:

a) BEC version

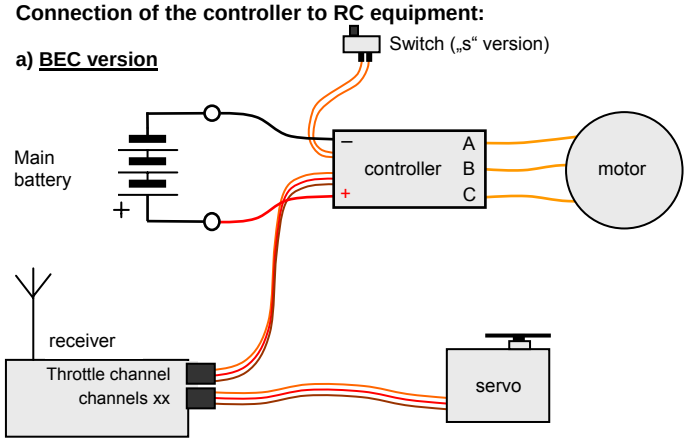

b) OPTO version

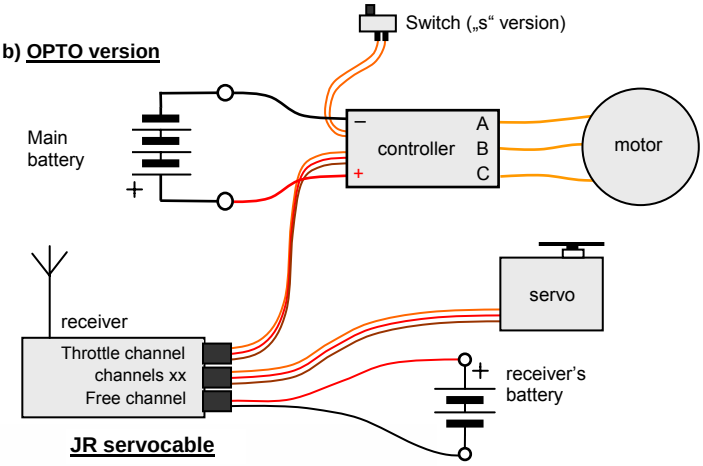

JR servocable

Note:
(for BEC versions only !!!)
If you need to feed the receiver or servos from some other source carefully take out the central core of the servo cable connector. The taken out core of this conductor must be properly insulated.!

No disconnect for „OPTO" versions

Control pulses
+5V (6V) BEC voltage
Ground (minus)

orange
red
brown

Switch

OFF position
ON position
(open contact)

2) WITHOUT PROGRAMMING – BASIC MODE / Quick Start (Go to water):

In the factory settings (basic mode) the controller is set automatically and meets the requirements of most users without any changes. This means that no programming is necessary, it is possible to go driving right after opening the package.

The controller is preset:
- **NiCd/NiMH cells, number of cell is determined automatically** (for charged battery). For Lipol cells you must set parameter "B" ! (Details below).
- **all other parameters is default.**

If this setting does not suit you, see section 3, 4 or 6 (programming) for description of settings change.

The brake is already switched off.

Starting without the brake (1):
(1. possibility)

1. **switch the transmitter on**
2. throttle down (min. throttle)
3. **turn the controller ON**
4. 1 × BEEP ♫
5. **you may start**
   (max. throttle position is setup automatically)

Starting without the brake (2):
(2. possibility)

1. **switch the transmitter on**
2. full throttle (max. throttle)
3. **turn the controller ON**
4. 2 × BEEP ♫ ♫
5. throttle down up to 10 sec.
6. 1 × BEEP ♫
7. **you may start**

Note:
If in the starting position of the throttle stick (min position), 2 × BEEP can be heard, change the norm of deflection of the throttle stick on the transmitter

If in the starting position of the throttle stick (max position), 1 × BEEP can be heard, change the norm of deflection of the throttle stick on the transmitter.

SECURITY WARNING:
Always disconnect the accumulators when not operating the model !!! Do not leave model with connected accumulators unattended !!! Please notice that running motor with propeller is very dangerous !!! Do not charge batteries when connected to the controller !!!
If the controller is connected to batteries do not stay in the reach of the propeller !!!

- **NOTICE, reversal of poles on wires to the batteries will destroy the controller !** (This however, may not show immediately, but in some later starts or flights)
- **Short cut of these wires together** (when batteries are connected) **or short cut of these wires to the feeding voltage results in damage or destroy of the controller !**
- **Make sure that the motor is in a good condition. A faulty or damaged motor** (mechanical damages, shortcuts on winding, etc.) **may cause damage or destroy of the controller as well as the feeding cells.**

Development, manufacture, service:
MGM compro, Ing. G. Dvorský,
Sv. Čecha 593, 760 01 Zlín, Czech Republic
Tel.:+420 577 001 350, fax:+420 577 001 348
E-mail: mgm@mgm-compro.cz
Info: www.mgm-compro.com

MEGA BEC: controllers up to 12 cells are equipped with BEC. The BEC can hold peak currents up to 4A and loss power loads which are significantly big but has its limits. It may not exceed 20W. It is possible to determine for example current which may be drawn from BEC under given load and voltage and also find out for how long from the graph. The power losses of the BEC warm the controller up. **It is necessary to remove the generated heat by airflow**. If the BEC is loaded with the power loss >5W pauses for cooling are necessary so that the average power loss is ≤ 5W. **REMEMBER that the controller is also heated by the power loss generated in the motor part !**

Power loss of 5V BEC: $(U_{BATT} - 5V) \times$ *current* I

or for 6V BEC: $(U_{BATT} - 6V) \times$ *current* I

(it is favorable to use axis with difference of voltages $U_{BATT} - U_{BEC}$)

Example: (see graph) if voltage of batteries is 10,5V it is possible to draw current of 1,8A continuously for 10 sec. when the power loss of BEC is 10W. If the load would only take 5 sec. the power loss may be 15W and it is possible to draw current up to 2,7A.

Only version "MEGA BEC+" features long lasting shortcut protection!

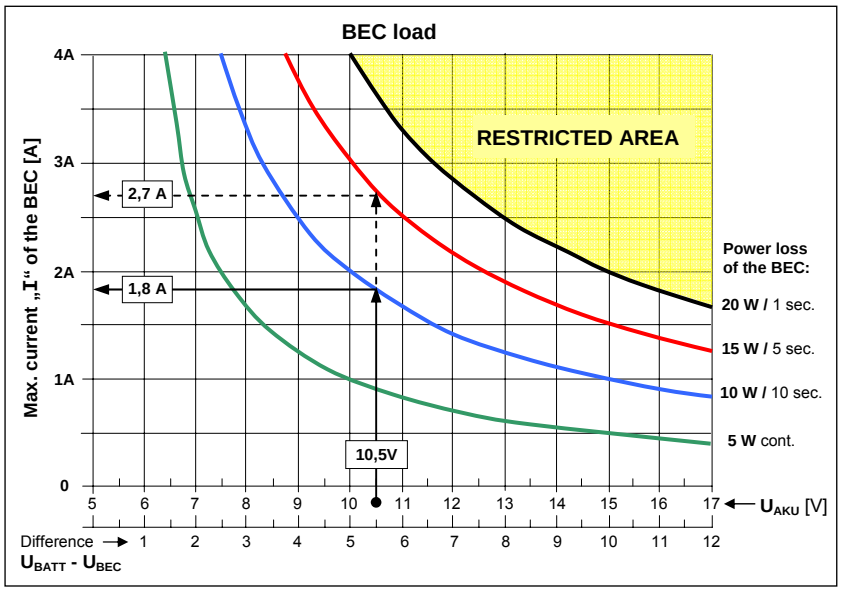

S BEC (switched BEC): TMM controllers for higher loads and voltage up to 6 Lipol / 18 Nixx use switched BEC (see parameter table page 7). Such BEC is favorable in operation with higher input voltage as the losses are lower or to put it differently, it enables to draw significantly higher currents even from higher input voltage. Load characteristic differ significantly from those of linear BECs. However, also this type of BEC has its limits even though it is much less dependent on input voltage than linear type of BEC.

Current load normally decreases with rising temperature. Maximal time for which a given current may be drawn is shown in the graph and it also decreases with rising temperature. Also this type of BEC must be cooled by airflow when drawing higher currents.

With BEC it may endure a short time short-circuit on output without damage.

It is possible use powerful digital servos also.

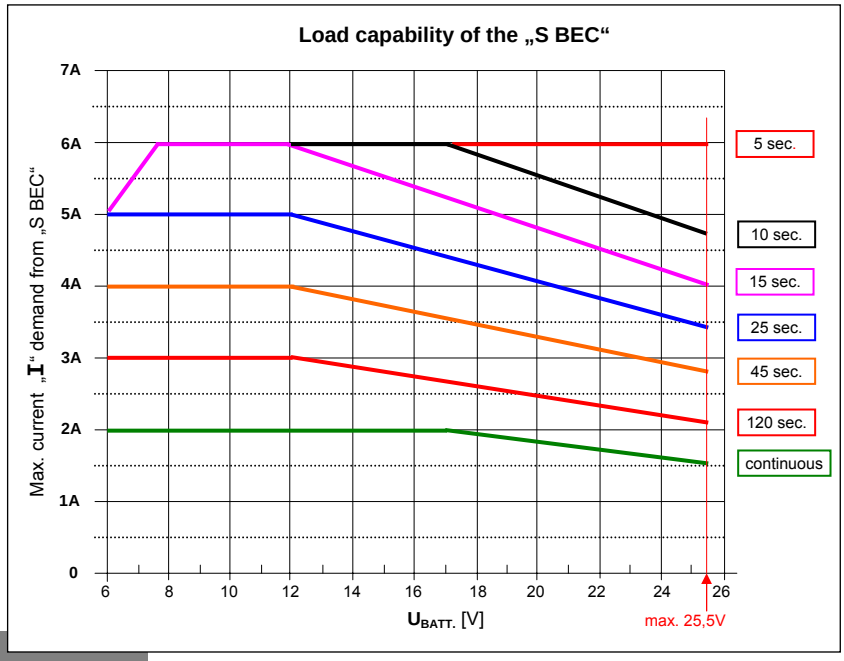

Example: 6 Lipol cells (that is 25.2 V charged, 23 – 24 V under load). The servos draw 3A. With BEC it endures this current for 45 sec. without cooling. In real operation such situation is rare; the situation is usually more favorable as the servos are not working continuously and do not have a continuous draw all the time – in such intervals without load or with a small load BEC is cooled.

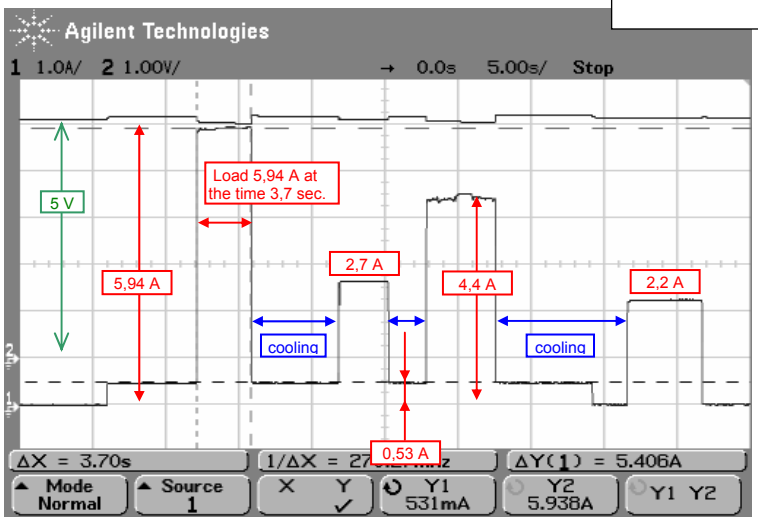

Example of S BEC load.

When exceeding the maximal limits of current or power losses, BEC may be destroyed and the model may be uncontrollable !

Please, notice that servos loaded with the control surfaces (rudder, ailerons etc.) in the air draw many times more current than when you move them on the ground **!**

Note: be careful when determining the range of the set, especially when using more batteries – in case of signal loss servos might turn to their maximum which would cause significant rise in drawn current. This might lead to a power overload of BEC with all its consequences. The danger is lower with receivers which set a defined servo position when loss of signal occurs.

CONNECTING BEC: if two controllers are used in a model, BEC can be connected in two ways:

a) if each controller is switched on separately (by switch or by connection to batteries) it is possible to use only one BEC – it is necessary to take out the middle core of servoconnector of one controller

b) if a simultaneous switch on of both controllers is ensured (connected „+" and „–" wires of both controllers, without switches) both BECs can stay connected. This will also increase allowed current and power loads (aprox. twice) of BECs connected in this way.

3) Programming / obtaining data from controller using PC:

If you wish to program using PC or obtain data from the controller, USBCOM(+) module (line USB, order number 86.20002) are necessary for connecting the controller to the PC. Also a SW which is a part of the communication module is needed**. It is necessary use connecting the USBCOM(+) module and CC_02 cable into ICS connector, it is not necessary to disconnect the controller from the receiver upon each programming (data reading-out). Connection via servocable is no supported.**

Programming the controller using PC will make the process of setting parameters easier and clear. Obtaining data about last flight will help determine an optimal power of your model so that both power and technical possibilities of your controller / motor / batteries are fully used and that the possibility of overloading them is avoided at the same time. If using controllers with BEC keep the transmitter turned on while programming – servos will not jerk when the controller is turned on.

To install, and obtain data from controller and program controller please refer to instructions in manual for your communication module.

The overview of data that can be obtained from controller (from last flight):
- average current at full throttle in stable state
- maximal peak current
- end voltage of battery
- maximal temperature of the controller
- min. throttle position
- max. throttle position
- max. motor revolutions

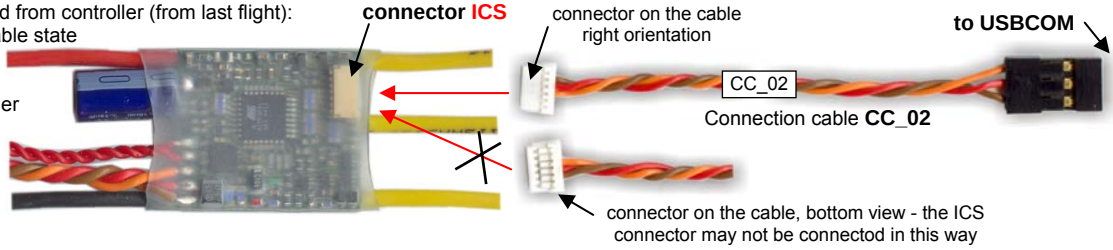

PC window:

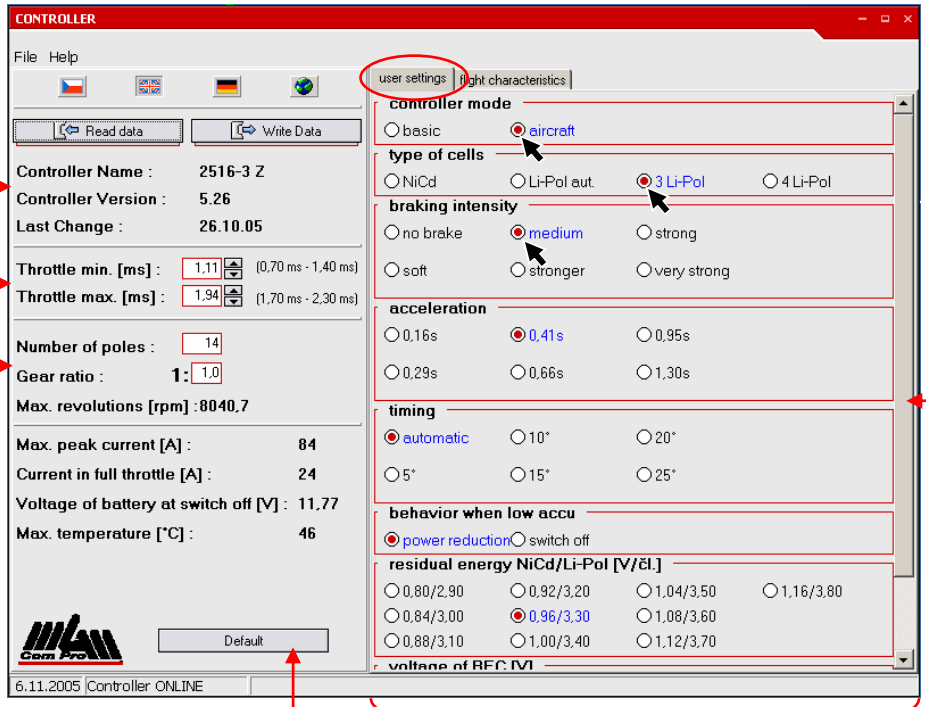

4) Programming by card UNICARD:

All parameters may be easily set using programming card UNICARD. Connecting via CC_02 cable into ICS connector, it is not necessary to disconnect the controller from receiver before each programming.
If using controllers with BEC keep the transmitter turned on while programming – servos will not jerk when the controller is turned on.

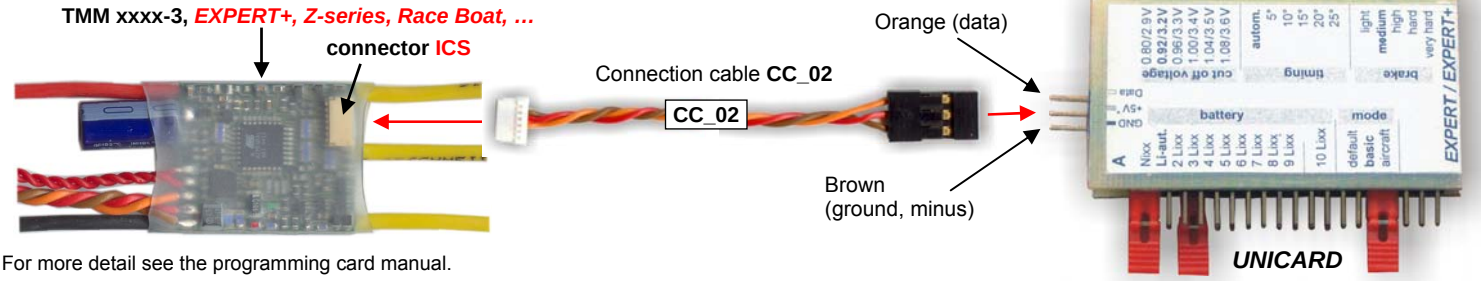

For more detail see the programming card manual.

Recommended procedure for programming by *UNICARD* or by *PC*: (unnecessary for BASIC mode)

I) first teach the controller the real limit boundaries of your transmitter – **this is done only for the first time or when using new transmitter or receiver** - that is "**minimal**" and "**maximal**" throttle positions for standard transmitters or "**neutral**" and "**full forward throttle**" positions for pistol grip transmitters.
This is done by programming using transmitter:
a) turn on the transmitter and move the throttle to maximal position (forward),
b) turn the controller on, wait 10 seconds for 3 motor beeps, then
c) move the throttle to **minimal** position (standard transmitters) or to **neutral** (pistol grip transmitters), wait for 1 beep and then turn the controller off.
The controller has now saved the positions (permanently until possible next programming).

II) when the controller has saved the real limit boundaries (min and max throttle positions) of your RC set, all the other parameters may be set anytime using the programming card **UNICARD** or by connecting the controller to the **PC** using **USBCOM**(+) and setting the parameters with mouse (utility "**Controller**").
*If you wish to set the parameters using transmitter, do not turn the controller off in **c)** above but continue programming (for details page 6).*

5) Data recording, data loading and programming with BB_03 module

BB-03 brings a completely new solution for optimization and setting of the power units in your models. The complete instructions may be found in the manual to Black Box BB_03.

Only a brief overview to give an idea:
When „**Read data from Black Box**“ button is pressed, data recorded in BB are being drawn as curves into graph. When the whole recording is read-out (here 52.5seconds) - all data are displayed on screen. The scale is set automatically according to the biggest displayed value.

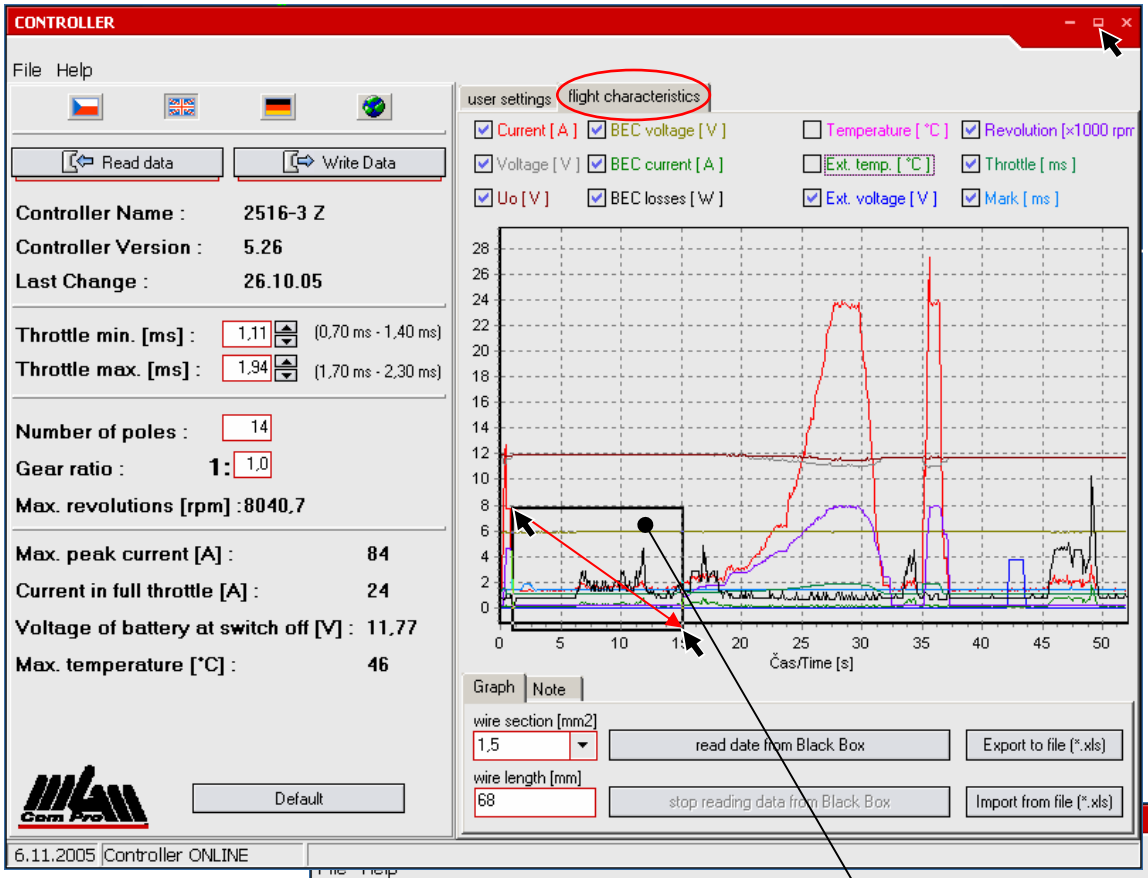

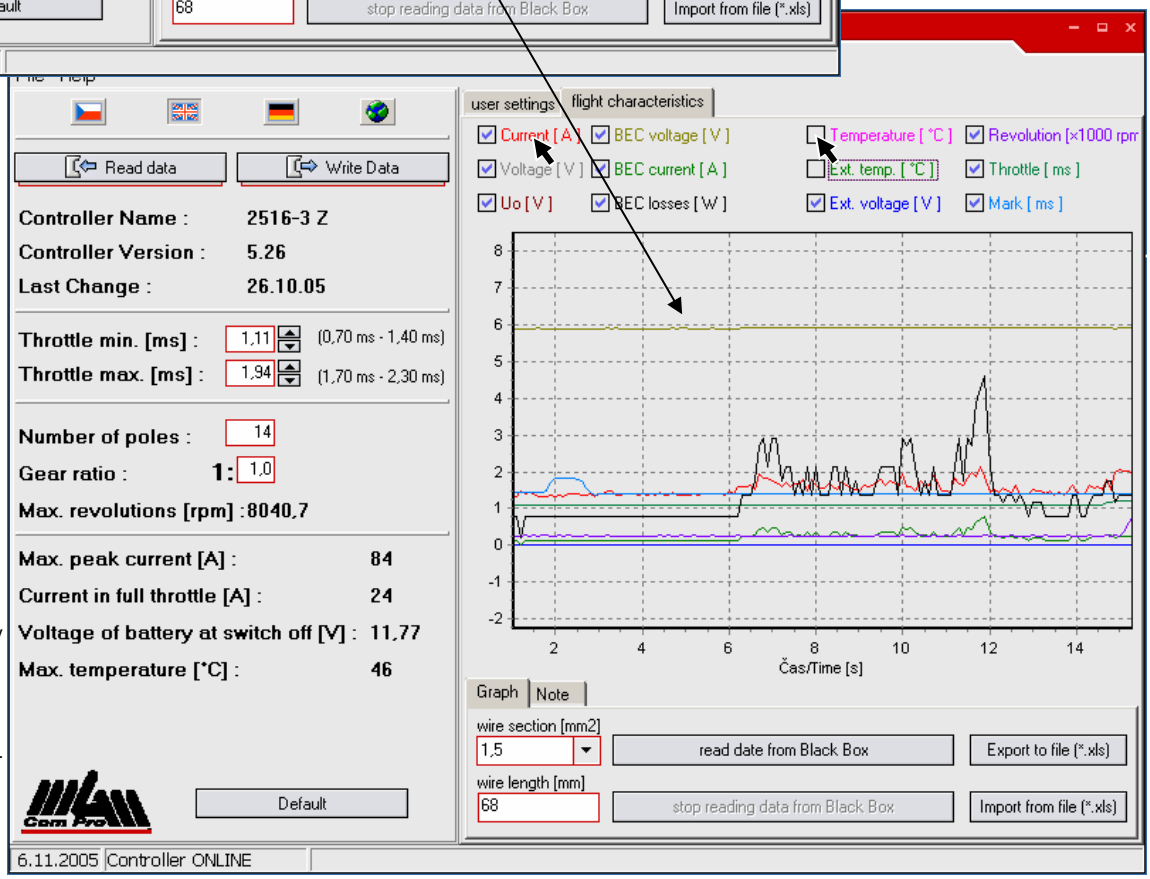

It is possible to choose which curves (data) will be shown by clicking on the box next to its name [**1**].
It is also possible to only view selected curves.

Also the color of any curve may be changed – move the cursor to the colored name of the curve [**2**], then right click and color toolbar will pop up.
Now you may change the color.

The „ **CONTROLLER** “ window may be open in the full screen as is usual with in Windows.

To zoom in, left click on the mouse and choose the area to zoom in by moving the mouse from the areas left upper corner to its right bottom corner. To move with the zoomed area hold the right mouse button.

The button „**Export data (*.xls)**“ is used to export the data under any name **together with note** which may include important data of this recording (such as model, motor, throttle, ...) for easier orientation in measurement comparison.
Data may be shown any time later using „**Import data (*.xls)**“ and choosing requested flight recording from the PC memory.
The exported data (in excel format) may be processed in Excel (e.g. to create power consumption Pmot = Voltage x current), draw graphs, work with recordings, etc.

6) Programming with transmitter:

All programming can be done thought transmitter and receiver with which the controller will run. After programming the data will be saved (until possible next programming) and the controller must be switched off. After switching it on again it is ready to fly with the newly set parameters. If after switching on, the throttle stick is not in the min position the controller waits for it to get there (safety precaution) – if the throttle is in its min position you may take off immediately. If transmitter or receiver is changed for a different one, it is recommended to do the programming again – it is enough to start programming mode only so that new parameters of control signal are saved.

How to program the desired "value" in parameter you are setting (basic procedure in each parameter)**:**
Move the throttle to ½ throttle, LED will be switched off 2x (twice) and motor beeps 2x. Move throttle back to mi position, LED will be switched off once and motor beeps once. Repeat this procedure (1/2 throttle – min throttle) as many times as is the number of parameter (according to the table) you wish to set. **For example:** for setting the **number 3 in parameter E** (which is timing 10°) repeat the whole procedure (1/2 throttle –min throttle) **3x** (you certainly have to be in parameter E).

The programming of each parameter will be finished when you move the throttle from min position to the full throttle –LED will be turned off 3x and motor will beep 3x, then move the throttle back to min position, LED will be turned off 1x and motor will beep once – the parameter is programmed to the value you have chosen and saved ***(this sequence is marked as "ENTER")***. This also automatically gets you to next parameter. After the last programmed parameter the controller must to be always switched off first !

It is not obligatory to program all parameters – it is possible to switch the controller off after any parameter which is correctly finished by ENTER sequence. The following parameters will not be changed and all the preceding will be saved.

If you do not wish to change some parameter (you wish to preserve its last value) you directly set full throttle when programming it (no ½ throttle – minimum procedure, but directly ENTER). The parameter value stay as it was before and the controller will get to the next parameter programming

EASY return to default settings: start the controller with full throttle as if you were going to program. After 10 seconds the controller will beep 3 times. Do not move the throttle to break position but wait another 5 seconds for 4 beeps. After those, move the throttle to break position (in 3 seconds) and the default setting is resumed and BASIC mode is set. If the throttle is not moved to break position in the 3 seconds time, the setting will not change and controller waits for switch off.

The programming:

I) Turn the transmitter on with throttle stick in max position !

II) Turn on the controller. After 10 seconds ***(++)*** the controller will beep 3 x and LED will blink and stay turned on. Now you have 3 seconds to move the throttle back to zero. If in this time limit you do not put the throttle in min position the programming process will end and the controller will be turned off. **Its next operation is possible after switching off and then turning on by switch (disconnecting and connecting of batteries).** If you put the throttle to zero in this time limit the motor will beep 1x and the LED will be turned off 1x. Now you are in the programming mode and may start to program parameters according to the procedure described above.

(++) If before this programming the BASIC mode was set, the motor will beep 2× after switching on the controller, do not take care of this, wait for 3 beeps.

III) Parameter A – mode choice BASIC / BOAT:

1) You do not wish to do any programming and prefer to use the default settings (BASIC mode):
Move the throttle to ½ throttle, LED will be switched off 2x (twice) and motor beeps 2x. Move throttle back to min position, LED will be switched off once and motor beeps once. Confirm this by moving the throttle from min position to full throttle – LED will be switched of 3x and motor beeps 3x. Then go back to min position (LED switches off once, motor beeps once]. The default setting is set. It is possible to follow with programming number and type of cell, parameter B (necessary for more then 5 Li-xxx cells and Nixx battery). After programming B parameter the controller switch off.

2) BOAT MODE (full programming):
Move the throttle to ½ throttle, LED will be switched off 2x (twice) and motor beeps 2x. Move throttle back to min position, LED will be switched off once and motor beeps once. Repeat this procedure once more (you need to set value 2 of this parameter). Confirm this by moving the throttle from min position to full throttle – LED will be switched of 3x and motor beeps 3x. Then go back to min position (LED switches off once, motor beeps once]. The aircraft mode is now set and you may proceed to program the next parameter B (the next ones).

IV) parameter B – type (and/or number) of cells:
According to *„How to program the desired "value" in parameter you are setting"* (see above), set the desired value of this parameter from 1 to 10 (look up in programming table). Now by using "ENTER" procedure (full throttle – min throttle) this parameter will be set and saved and you may proceed to program next parameter.

V) parameter D to J (parameter „H" – BEC voltage – in the OPTO versions is automatically jumped)**:**
Set the desired value according to the table) for each parameter. End and save each parameter by ENTER sequence which will also move to the next programmable parameter. Parameters which you do not wish to change may be skipped by directly performing ENTER sequence. After programming the last desired parameter **the programming is finish by performing ENTER.**

VI) Switch the controller off.

Advantages of TMM® controllers *Z-series* line:

a) **compatibile with measuring device Black Box BB_03 (measuring and recording of all important parameters during flight)**
b) **programming using ICS connector – it is not necessary to disconnect the controller from the receiver upon each programming**
c) possibility of immediate use, no programming required
d) easy programming (setting) important parameters using transmitter, UNICARD or PC *(for more information see „Programming" part)*
e) **important data measured in operation of controller may be obtained using PC** – *great for optimal power setting*
f) **outstanding protection and management of Lipol/Lion** *(very important)* **and NiCd/NiMH batteries**
g) **possibility of setting residual energy for BEC (switching off voltage)**
h) perfect masking of signal interference and losses
i) extremely fine throttle step (1023 steps)
j) very soft starts
k) motor and controller overload protection
l) small dimensions and weight
m) **very powerful BEC (MEGA BEC or switching BEC)**
n) **possibility for setting 5V or 6V for BEC**
o) all controllers is made with switch also *(safe connection)*

Using abbreviations

ACF - automatic current fuse
ACR - automatic current reduce
APS - automatic parameter setup
BEC - battery eliminator circuitry
BLDC - brushless DC motor
IPR - intelligent power reduce
LED - light emitting diode
PWM - pulse width modulation
RPC - radio priority circuit

Meaning of each parameter:

Parameter A – *mode*: choice of modes (BASIC / BOAT)

– ***BASIC:*** ***basic mode with default settings****. Lipol cells are default settings! Enables the user to start flying immediately. Brake must be set ON or OFF after each switch ON of the controller again.* ***Only type and number of cells can be set permanently****.*

– ***BOAT:*** ***all parameters can be set by user.*** *All parameters are permanently saved. After switch on the controller is immediately ready for use with the saved settings. Throttle must be in min position to start – a safety precaution to avoid unwanted start of motor.* ***When change receiver (or transmitter), we recommended set min. and max. throttle position again*** *(go to programming mode only, it is no need set other parameters). Some of receivers have no the same output pulse width for the same transmitter. When is pulse width for minimum throttle position higher, controller wait for min. throttle position (remember pulse width) and this value no coming. It is the same situation as you no move throttle stick to minimum position and controller wait and wait and wait.*

Parameter B – *battery*: sets type of batteries – NiCd, NiMH or Li-Ion, Li-Pol (automatic number setting up to 5 cells) and number of Li-xxx cells directly. *It is necessary to specify a type of cells to ensure correct behavior of controller and for reliable protection of battery. For Li-xxx cells it is also recommended set number of cells. You can choice automatic number setting – correct number setting is possible only for full or partial charge battery. For discharge battery is not possible automatic setting correct number of cells. For 2 Lipol cells set automatic setting.*

Parameter C – *brake*: **not used, ESC work without brake, parameter is automatically jumped**

Parameter D – *acceleration*: Enables to set acceleration in 6 levels. Set according to your needs. *The faster acceleration is set, the higher peak currents will occur at start – this may lead to a cut off by current fuse of the controller. These currents may reach up to 10 times of nominal current! Therefore set with consideration so the speed of reaction was high enough but not unreasonably fast for your model.*

Parameter E – *timing*: here you may choose (and experiment with) 5 different timings. **The sixth possibility is automatic timing which is strongly recommended because it ensures optimal setting and maximal efficiency.** While using the definite values of timing and higher timing you may rise the motor revolution or the twisting moment a bit but always at the expense of lowering the efficiency. If you wish to have higher revolutions it is better to use different motor or more cells because lower efficiency cannot be made up for. High value of timing may in unsuitable combination with some motors damage the controller !

Motor with high inductance in rate to maximal current, for example AXI 4120, 4130, …, some "LRK" motors, lots of motors from CD ROMs, etc.) setup timing 5° or 10° or 15, automatic timing may not be optimal. The need of setting different timing can be easily recognized – motor looses synchronization for higher loads.

Parameter F *:* **not used, ESC slow power reduce for empty battery, parameter is automatically jumped**

Parameter G – *Residual energy for BEC*: this parameter sets the moment in which the revolutions will start to be reduced or cut off motor when battery are getting low. If this parameter is set appropriately, the start of motor revolutions reduction will be close to the point when batteries are almost discharged. It will set the amount of residual energy for BEC. **This is very important for Lipol cells.**

Parameter H – *BEC voltage*: enables to set voltage of BEC to standard 5V or to higher 6V. Higher voltage could be advantageous if you need higher power and speed of servos. **This parameter is automatically jumped in OPTO versions** (after „**G**" parameter is programming directly „**I**" parameter).

Parameter I – *reverse*: This parameter sets a reversed direction of motor rotation without the need of swapping any two wires to motor.

Parameter J: ***interference masking*** This parameter enables to set an optimal cooperation between receiver and controller when loss of signal occurs or when the signal from transmitter is noisy.
Many processor receivers take care of this problem themselves (not like analog receivers). Controller has also very powerful ability to suppress losses due to interference. The cooperation of these two parts (controller and receiver) then may not be optimal. In such cases set this parameter to "no". The controller in this set up, has some of the masking algorithms suppressed and leaves the receiver to handle the situation – the cooperation of controller and receiver is than much better. When using analog receivers (and some digital ones) it is recommended to leave this parameter set to "yes", then the controller takes care of masking the loss of signal and interferences completely by itself. If you are not sure how your receiver solves this problematic, try both settings and choose the better one.

Programming table:

Pa-ram	Value of parameter →	0 *(= ENTER)*	1	2	3	4	5	6	7	8	9	10
A	Mode choice	next parameter	**„BASIC"**	„BOAT" mode (full progr.)	-	-	-	-	-	-	-	-
B	Battery type*)	next parameter	**NiCd, NiMH**	Li-xxx automatic / 2	Li-xxx 3 cells	Li-xxx 4 cells	Li-xxx 5 cells	Li-xxx 6 cells	Li-xxx 7 cells	Li-xxx 8 cells	Li-xxx 9 cells	Li-xxx 10 cells
D	Acceleration (from 0 to 100%)	next parameter	0,16 sec.	0,29 sec.	**0,41 sec.**	0,66 sec.	0,95 sec.	1,3 sec.	-	-	-	-
E	Timing	next parameter	**automatic**	5°	10°	15°	20°	25°	-	-	-	-
G	Residual energy for BEC	next parameter	**Nixx:** 0,80 V Li-xxx: 2,90 V	0,84 V 3,00 V	**0,88 V** 3,10 V	0,92 V 3,20 V	0,96 V 3,30 V	1,00 V 3,40 V	1,04 V 3,50 V	1,08 V 3,60 V	1,12 V 3,70 V	1,16 V 3,80 V
H	BEC voltage (only BEC versions)	next parameter	**5V**	6V	-	-	-	-	-	-	-	-
I	Reverse	next parameter	**no**	yes	-	-	-	-	-	-	-	-
J	Interference masking	End of programming	yes	**no**	-	-	-	-	-	-	-	-

Note: Default setting is marked as **bold**
Only type and number of cells can be set permanently in BASIC mode ! (all other parameters is default)

***)** maximal number of Lipol cells for a controller is given in technical specifications for each controller **(page 9)**

Standard setup: New controller has factory setup (default values):

Basic mode (see on page 3, point 2):

- NiCd/NiMH cells, automatic number of cells
- Acceleration time 0,41 sec.
- Timing automatic
- Residual energy (cut of voltage) 0,88V/cell
- BEC voltage 5V
- Interference masking no (standard)

Protective and safety mechanisms of TMM® controllers:

Accumulators are protected in four ways.

1) Firstly, due to the use of automatic current fuse (**ACF**) the possibility of current overload of accumulators (and their possible damage) even at crisis points is significantly reduced.
2) Secondly, the used system of intelligent power reduce (**IPR**) always ensures through measurements of number of voltage, currents, accumulator condition and calculations an optimal point of starting continuous reduction of motor performance (or the point when motor is switched off – according to the setting of parameter F") so that accumulator cells do not get extremely discharged – which is very important specially for Lipol cells.. This, not mentioning other advantages, reduces the possibility of reversal of poles of lower cells (applies mainly to NiCd / NiMH cells).
3) This system at the same time **enables retaining defined energy for BEC (perfect RPC)** in controllers that have BEC which is of great significance for flying models (a crash due to running out of energy for receiver and servos can be avoided) . The amount of residual energy can be user set.
4) the automatic current reduce (**ACR**) due to which a drop in voltage for BEC under extremely big current load (for every given controller) while motor starts does not occur.

When switching (reducing power) the motor off at solid boundary as it is with regular controllers **(a)** there is only very little energy remaining for BEC, particularly for 8 or more Nicd / NiMh cells in battery pack. This mainly applies for controllers with the switching of one boundary at (5.5V). The better accumulators are used the less energy (time) is left to land (standard ESC).
Comparing to this, TMM **(b)** ensures the remaining energy to be big enough; it is also possible to modify its size according to user needs (bigger for gliders). This energy is certainly insignificant as long as duration of running the motor is concerned, but it is very significant for feeding BEC.

Graphs below show situation with 3 Lipol cells. In graph a] a regular controller situation is depicted – controller is Lipol compatible and has a solid boundary of switching of. In graph b] a behavior with TMM® controller is shown – with a boundary on a discharging curve of inner voltage of battery..

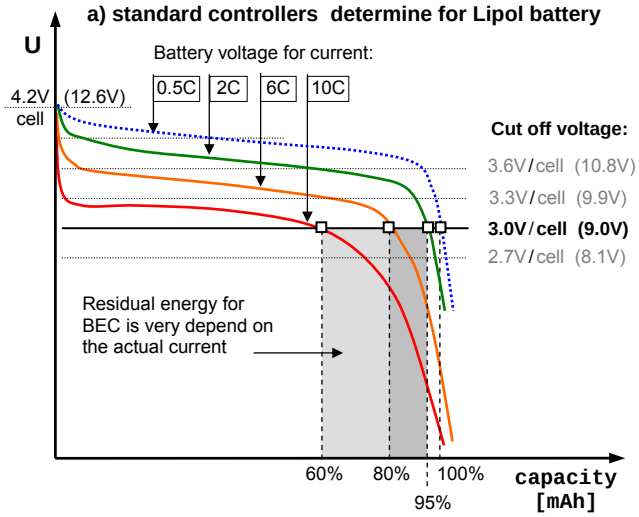

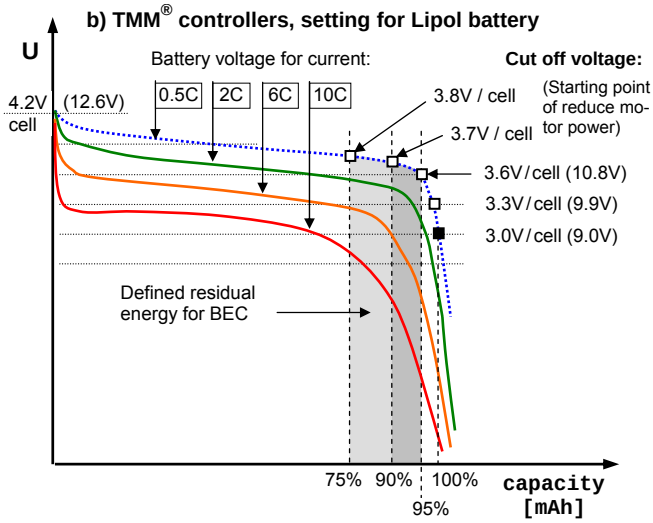

Regular controllers (even Lipol compatible) have either a solid switching off voltage (for example 3V per cell) or it is possible to set this value. For example for set boundary 3V per cell the controller is switch off or it starts to reduce revolutions when this value is reached no matter how big the drawn current is. **This means that the residual energy significantly changes according to a instantaneous current load of batteries** (and also according to inner resistance of the cells] from 0 to 95 % - depending only on the set voltage boundary. If the example on the graph above is considered with a set boundary of 3V per cell the controller will switch off when drawn current is 10C when there is still 40% of energy still left, while for 2C current when only 5% of energy is left. For boundary of 3.3V per cell the controller would switch off for currents of 10C when only few percent of energy were consumed while for 2c after 92% of energy would be consumed..

TMM® controllers handle the situation quite differently. The switching off voltage is always recalculated into „inner" voltage of the battery – therefore is independent on both drawn current as well as inner resistance of the accumulator. **This means the set residual energy is always the same and does not depend on currents and inner resistance of battery.** Batteries are then always discharged to same level, regardless how big currents are drawn. The value of set residual energy is therefore only little dependent on the features of battery and the discharging current. For example for switching voltage 3.7V per cell controller switches off the motor or starts to reduce revolutions always after 90% of energy is used up no matter if the drawn current is 10Cor 2c. (The voltage of accumulator after switch of the current always rises to a value close to curve of 0.5V – this discharging curve is close to „inner" voltage of battery. This curve describes how much the controller is discharged.

The controllers efficiently **mask interference and drop-outs** up to 1,5 sec. When long-lasting drop-outs or interference occur the controller slowly reduces motor revolutions. After the signal is resumed the controller continuously gets to the requested power. Long lasting drop out of signal (or its absence) is indicated acoustically by motor as well as by LED. This can be used for example when searching for lost model.

Without the proper signal from the transmitter (e.g. transmitter is turned off), **the motor neither jerks nor runs but is at standstill**

Thermal fuse of the controller is set to 90°C when performance is reduced to ca 60%. After cooling off (even in flight) the reduction is disabled. After switching on, the temperature above 70°C is monitored; if the temperature is higher the controller does not start. New start is possible only after the controller temperature falls.

WARNING :

You risk destroying the controller for:

- connecting more battery cells to the controller than the max. number specified in the technical data
- reversing connections to the accumulator
- shortcutting of wires to motor when batteries are connected
- changing motor and accumulator outlets
- overloading of the BEC with bigger currents or bigger power loss than is specified in technical data
- water in the controller (except for „hydro" versions")
- metal objects in the controller (screwdrivers, wires, etc.)
- disconnecting the controller from batteries or turning off the controller while motor is running (or still turning)

Development, manufacture, service:
MGM compro, Ing. G. Dvorský,
Sv. Čecha 593, 760 01 Zlín, Czech Republic
Tel.:+420 577 001 350, fax:+420 577 001 348
E-mail: mgm@mgm-compro.cz
Info: www.mgm-compro.com

Operating data:

Temperature of the environment:	0°C to 40°C	**Number of regulation steps:**	1024 / full throttle
Motor controlling:	PWM 8 kHz	**Max. rpm for 2 poles motor:**	~200 000 rpm

Control signal: positive pulses 1,5 ± 0,5 ms, period 10 ÷ 30 ms
User set parameters: see programming
MEGA BEC+: **5V and 6V / max. 4,0 A** (load capability see graph), input battery voltage = 6 – 17V
S BEC (switching BEC) **5V and 6V / max. 6,0 A** (load capability see graph), input battery voltage = 6 – 25.5V
Power supply: **from batteries only:** NiCd, NiMH, Li-Ion, Li-Pol

Suitable for motors: Mega AC, Model Motors, MP JET, PJS, Überall model, Hacker, Kontronik, LRK, Plettenberg, etc.
for 2 to 20 pole motors of classical conception (rotor inside) **and also for outrunners** (rotor is on the outer side).
Motors with extremely low inductance (for example TANGO from Kontronik, etc.) are no allowed to connection – need PWM 32 kHz.

Cooling: for the best cooling of the controllers is used water-cooling.

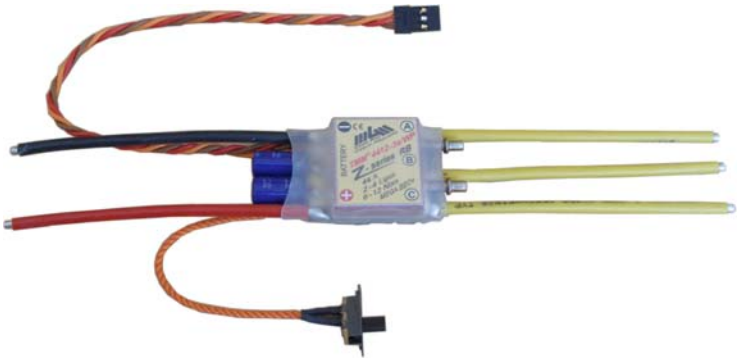

Water proof: for better resistance for humidity or water are these versions made with water proof protective coating ("WP" version).

TMM® xxxx-3, *Z-series RB* V 5.7x	1812-3	2512-3	3312-3	4412-3
Dimensions [mm]:	28×25×11	28×25×11	36×28×11	36×28×11
Dimensions (with external capacitor) **[mm]:**	44×25×11	44×25×11	51×28×11	51×28×11
Weight incl. all conductors:	29 g	31 g	58 g	58 g
Weight without power conductors (with servocable):	22 g	22 g	44 g	44 g
No. of feeding NiCd/NiMH cells:	6 – 12	6 – 12	6 – 12	6 – 12
No. of feeding Li-Ion / Li-Pol cells:	2 – 4	2 – 4	2 – 4	2 – 4
Max. current (for full throttle):	18 A	25 A	33 A	44 A
Max. current for 5 sec.:	23 A	30 A	40 A	55 A
On-state switch resistance at 25 °C:	2×3,7 mΩ	2×3,1 mΩ	2×2.9 mΩ	2×1,2 mΩ
Model:	MEGA BEC+	MEGA BEC+	MEGA BEC+	MEGA BEC+
BEC voltage:	5 / 6 V	5 / 6 V	5 / 6 V	5 / 6 V
Power conductors (90 mm):	1,0 mm²	1,5 mm²	2,5 mm²	2,5 mm²
JR gold connector, cables:	0,25 mm²	0,25 mm²	0,25 mm²	0,25 mm²

TMM® xxxx-3, *Z-series RB* V 5.7x	6018-3	8018-3	12018-3	16018-3	22418-3
Dimensions [mm]:	50×31×23	50×31×23	50×31×26	50×31×29	50×31×29
Dimensions (with external capacitor) **[mm]:**	65×31×23	65×31×23	65×31×26	65×31×29	65×31×29
Weight incl. all conductors:	80 g	82 g	108 g	116 g	119 g
Weight without power conductors:	65 g	67 g	77 g	85 g	88 g
No. of feeding NiCd/NiMH cells:	6 – 18	6 – 18	6 – 18	6 – 18	6 – 18
No. of feeding Li-Ion / Li-Pol cells:	2 – 6	2 – 6	2 – 6	2 – 6	2 – 6
Max. current (for full throttle):	60 A	80 A	120 A	160 A	224 A
Max. current for 5 sec.:	70 A	100 A	150 A	200 A	260 A
On-state switch resistance at 25 °C:	2×1,0 mΩ	2×0,67 mΩ	2×0,44 mΩ	2×0,33 mΩ	2×0,20 mΩ
Model:	S BEC	S BEC	S BEC	S BEC	S BEC
BEC voltage:	5V / 6V	5V / 6V	5V / 6V	5V / 6V	5V / 6V
Power conductors 90 mm (120 mm for 4 mm²):	2,5 mm²	2,5 mm²	4 mm² *)	4 mm² *)	4 mm² *)
JR gold connector, cables:	0,25 mm²	0,25 mm²	0,25 mm²	0,25 mm²	0,25 mm²

TMM® xxxx-3, *Z-series RB* V 5.7x	4024-3	8024-3	12024-3	16024-3	4032-3	6032-3	9032-3	12032-3
Dimensions [mm]:	50×31×19	50×31×22	50×31×25	50×31×28	50×31×22	50×31×22	50×31×25	50×31×28
Dimensions (with external capacitor) **[mm]:**	80×31×19	80×31×22	80×31×25	80×31×28	80×31×22	80×31×22	80×31×25	80×31×28
Weight incl. all conductors:	76 g	85 g	111g	120 g	83 g	85 g	111 g	120 g
Weight without power conductors:	62 g	70 g	80g	89 g	68 g	70 g	80 g	89 g
No. of feeding NiCd/NiMH cells:	9 – 24	9 – 24	9 – 24	9 – 24	9 – 32	9 – 32	9 – 32	9 – 32
No. of feeding Li-Ion / Li-Pol cells:	3 – 8	3 – 8	3 – 8	3 – 8	3 – 10	3 – 10	3 – 10	3 – 10
Max. current (for full throttle):	40 A	80 A	120 A	160 A	40 A	60 A	90 A	120 A
Max. current for 5 sec.:	50 A	100 A	150 A	200 A	50 A	70 A	110 A	150 A
On-state switch resistance at 25 °C:	2×1,4 mΩ	2×0,7 mΩ	2×0,47 mΩ	2×0,35 mΩ	2×1,5 mΩ	2×1,0 mΩ	2×0,67 mΩ	2×0,50 mΩ
Model:	OPTO	OPTO	OPTO	OPTO	OPTO	OPTO	OPTO	OPTO
BEC voltage:	--	--	--	--	--	--	--	--
Power conductors 90 mm (120 mm for 4 mm²):	2,5 mm²	2,5 mm²	4 mm² *)	4 mm² *)	2,5 mm²	2,5 mm²	4 mm² *)	4 mm² *)
JR gold connector, cables:	0,15 mm²	0,15 mm²	0,15 mm²	0,15 mm²	0,15 mm²	0,15 mm²	0,15 mm²	0,15 mm²

*) **Note.:** on request 2×2,5 mm² or 2×4,0 mm²

The appearance and operating data may be changed without prior notice

Development, manufacture, service:
MGM compro, Ing. G. Dvorský,
Sv. Čecha 593, 760 01 Zlín, Czech Republic
Tel.:+420 577 001 350, fax:+420 577 001 348
E-mail: mgm@mgm-compro.cz
Info: www.mgm-compro.com

PROGRAMMING TMM xxxx – 3, *Z-series RB*

Default parameters setup (factory parameters)

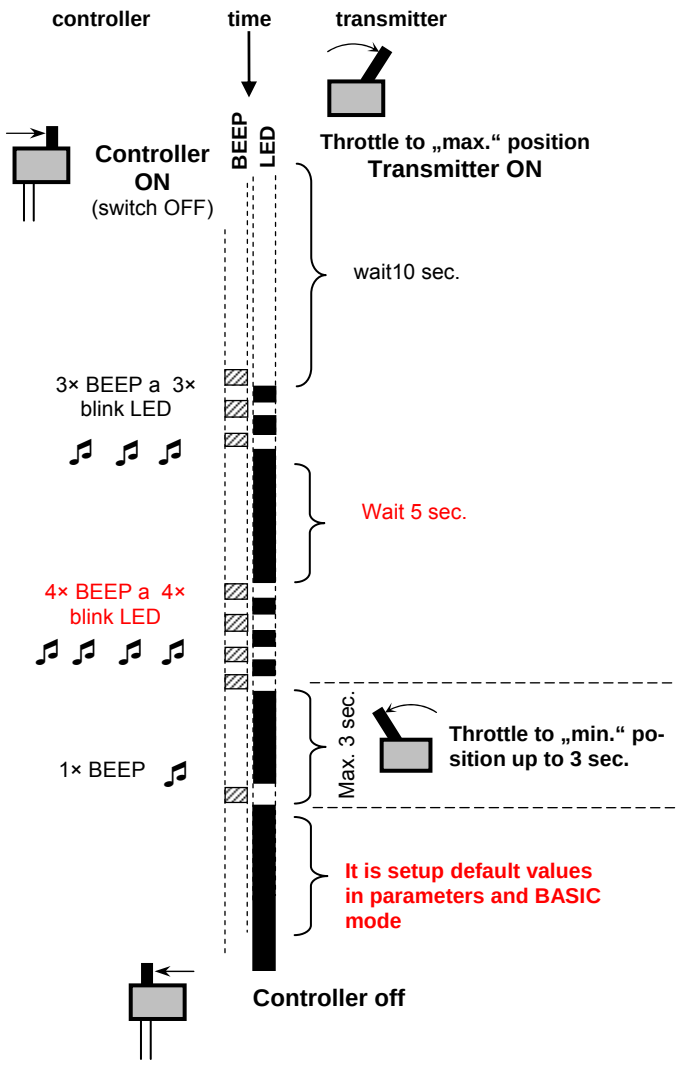

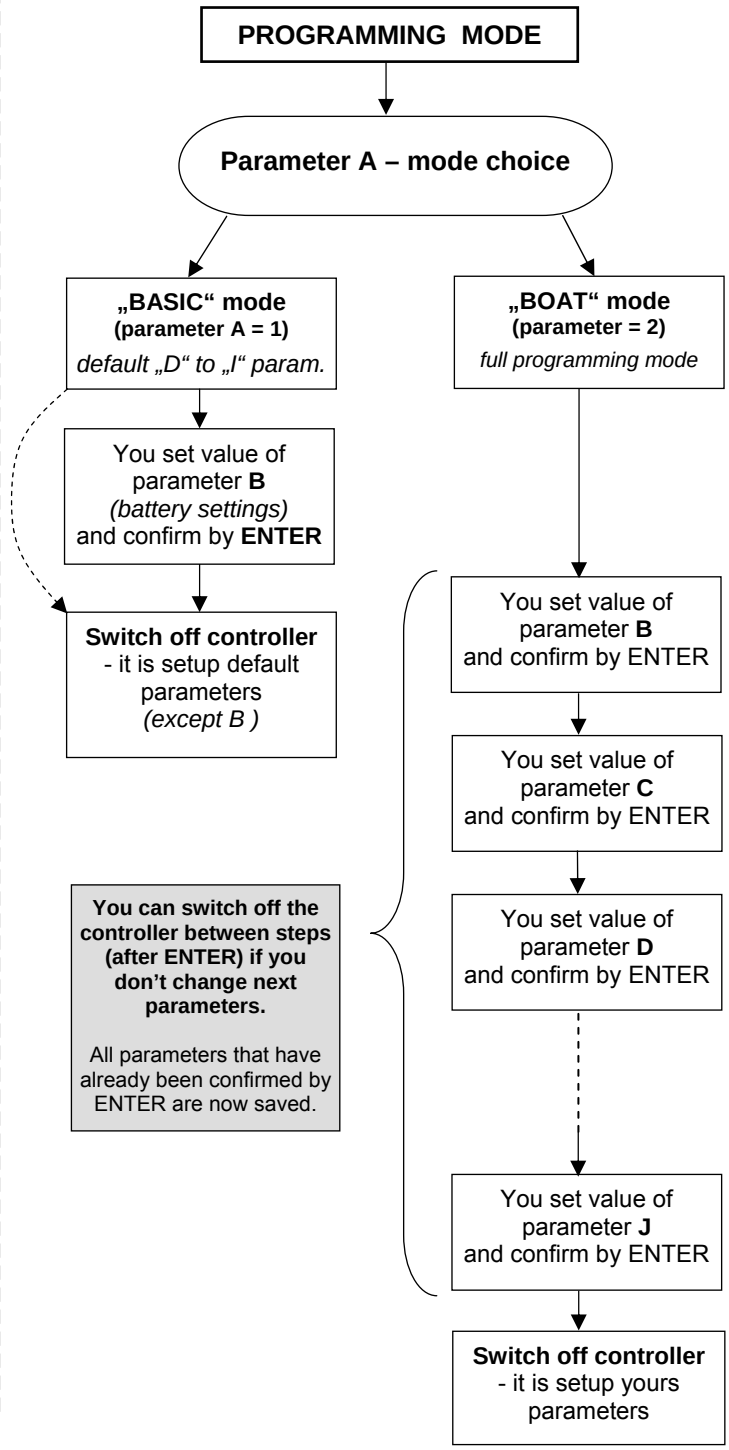

Error messages **(the controller must be switched off to correct error, then switched on again):**

- throttle stick was moved the opposite way then it is supposed to (the trhtolle stick was not in the min or max position at the beginning, and after beep it was moved to the max or min position to which …. the throttle was closer and not the other (correct way)
- low size of deflection of the throttle stick on the transmitter – you must shorten the size of deflection on transmitter
- overstep max. throttle position 0,5 and 2,3 ms – you must shorten the size of deflection
- starting an overheated controller
- more or less cells than specified
- current overload (resumes operation after dropping throttle to zero, it is not necessary to switch the controller off in this case)

Numbers gives the approximate length of beep in seconds

- signal drop out for long time ……

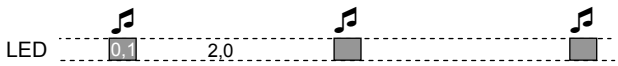

- **Motor** is unsuitable for this controller or too high voltage is used or short circuit in the motor is detected (LED is flashing only, no beeps) ……

- continual beep after switch on – data in EEPROM have been disturbed. The controller is set to default setting. **It is necessary to program it again !**

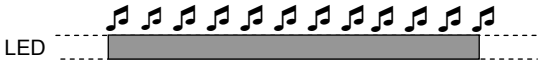

PROGRAMMING TMM xxxx – 3, *Z-series RB*

Lipol battery setup in BASIC mode

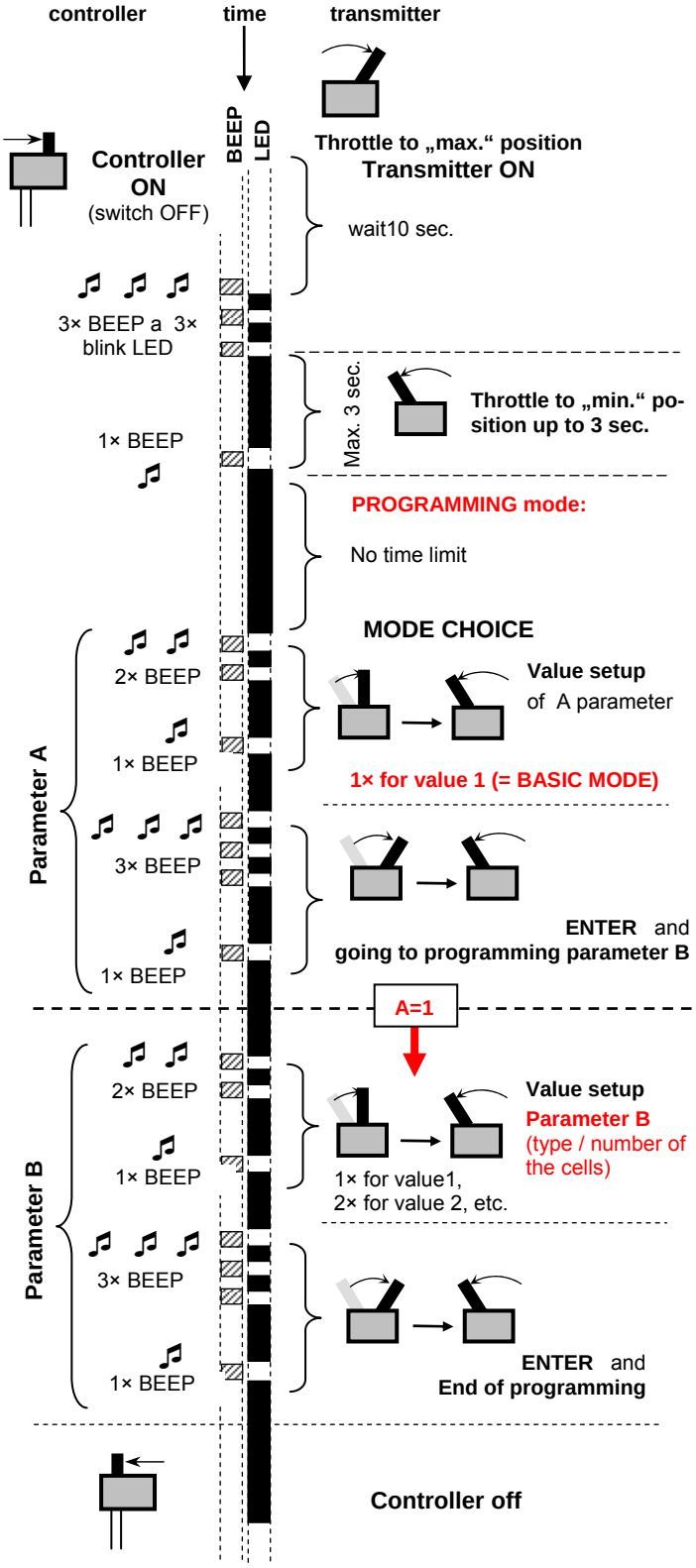

Programming in BOAT mode

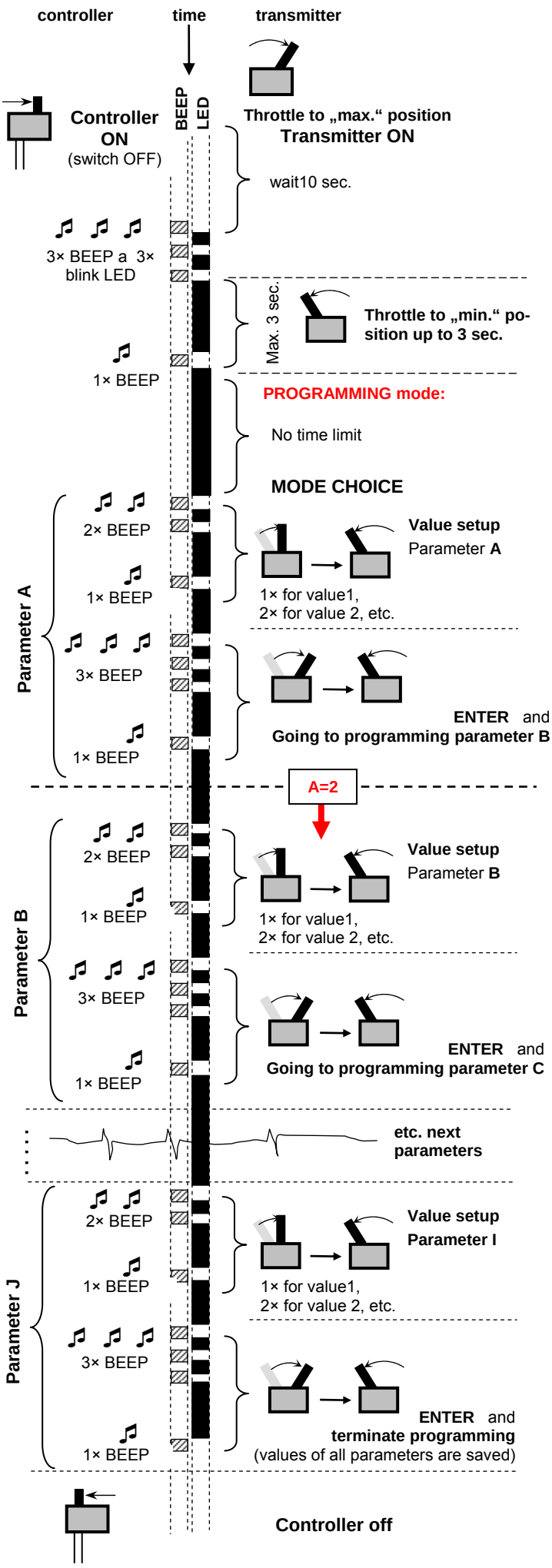

Legend:

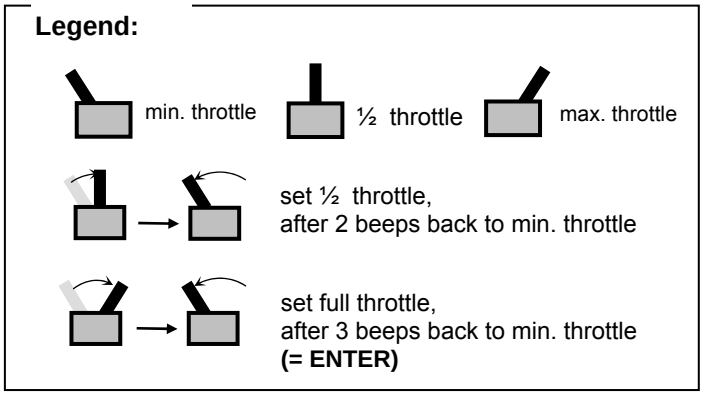

Examples:

A) Programming: Basic mode, 3 Lipol cells.

1) Switch the controller on with throttle stick in full throttle position
2) Switch the controller on (If basic mode is already programmed, the controller will beep 2x – ignore this]. After 10 seconds the controller will beep 3x and the LED will blink and stay lit. Move throttle to brake position, motor beeps once, Led blinks once – you have entered programming mode and you can program the first parameter A (see table)
3) Move the throttle to ½ of full throttle (idle position), LED blinks twice and motor beeps twice. Move throttle back to min position, LED blinks 1x and motor beeps. (parameter A=1, that is basic mode).
4) This setting has to be confirmed by ENTER sequence. Move throttle to full throttle position, LED blinks 3x and motor beeps 3x. Move throttle back to min position – LED blinks 1x and motor beeps 1x = ENTER, the Basic mode has been set.
5) Move the throttle to ½ of full throttle (idle position), LED blinks twice and motor beeps twice. Move throttle back to min position, LED blinks 1x and motor beeps. (parameter B=1) Repeat this 2x and parameter B will be set to value 3 (B=3, that is 3 Lipol cells).
6) This setting has to be confirmed by ENTER sequence. Move throttle to full throttle position, LED blinks 3x and motor beeps 3x. Move throttle back to min position – LED blinks 1x and motor beeps 1x = ENTER, 3 Lipol cells have been set
7) Switch the controller off, programming is finished.
8) Now, you wish to start with brake on.
9) Turn controller on with throttle in min position. Controller beeps once.
10) You may start now, maximal of throttle position is set automatically.

B) Programming: BOAT mode, 4 Lipol cells, acceleration 0.16 sec., timing according to default setting and 6V BEC voltage

1) Turn the transmitter on with throttle in max. position
2) Switch the controller on (If basic mode is already programmed, the controller will beep 2x – ignore this]. After 10 seconds the controller will beep 3x and the LED will blink and stay lit. Move throttle to brake position, motor beeps once, Led blinks once – you have entered programming mode and you can program the first parameter A (see table)
3) Move the throttle to ½ of full throttle (idle position), LED blinks twice and motor beeps twice. Move throttle back to min position, LED blinks 1x and motor beeps. Repeat this once more (parameter A=2, BOAT mode).
4) This setting has to be confirmed by ENTER sequence. Move throttle to full throttle position, LED blinks 3x and motor beeps 3x. Move throttle back to min position – LED blinks 1x and motor beeps 1x = ENTER, BOAT mode has been set
5) Move the throttle to ½ of full throttle (idle position), LED blinks twice and motor beeps twice. Move throttle back to min position, LED blinks 1x and motor beeps. (parameter B=1) Repeat this 3x and parameter B will be set to value 4 (B=4, that is 4 Lipol cells).
6) This setting has to be confirmed by ENTER sequence. Move throttle to full throttle position, LED blinks 3x and motor beeps 3x. Move throttle back to min position – LED blinks 1x and motor beeps 1x = ENTER, 4 Lipol cells have been set
7) Move the throttle to ½ of full throttle (idle position), LED blinks twice and motor beeps twice. Move throttle back to min position, LED blinks 1x and motor beeps. (parameter D=1), (D=1, acceleration 0.16 sec.).
8) This setting has to be confirmed by ENTER sequence. Move throttle to full throttle position, LED blinks 3x and motor beeps 3x. Move throttle back to min position – LED blinks 1x and motor beeps 1x = ENTER, 0.16 sec. acceleration time has been set
9) You do not wish to change parameter E – timing. This parameter will be skipped over by ENTER (value of D=0). . Move throttle to full throttle position, LED blinks 3x and motor beeps 3x. Move throttle back to min position – LED blinks 1x and motor beeps 1x = ENTER, parameter has been skipped with no change
10) You do not wish to change parameter G – residual energy. This parameter will be skipped over by ENTER (value of E=0). . Move throttle to full throttle position, LED blinks 3x and motor beeps 3x. Move throttle back to min position – LED blinks 1x and motor beeps 1x = ENTER, parameter has been skipped with no change
11) Move the throttle to ½ of full throttle (idle position), LED blinks twice and motor beeps twice. Move throttle back to min position, LED blinks 1x and motor beeps. Repeat once more. Parameter H=2, BEC voltage = 6V
12) This setting has to be confirmed by ENTER sequence. Move throttle to full throttle position, LED blinks 3x and motor beeps 3x. Move throttle back to min position – LED blinks 1x and motor beeps 1x = ENTER, immediate cut off V BEC voltage has been set
13) Because you do not wish to change following parameters, switch the controller off. Programming is finished.
14) When the controller is switched on again, only move throttle to min position (if it was not already there), controller beeps once and you may start with newly set parameters.

The very first programming using UNICARD or PC (only Expert or Z-series controller or controller with BB_03):

(Does not apply if you have already programmed the controller using transmitter)

Because the real minimum and maximum throttle positions of your transmitter (together with changes that the receiver causes) are not known for the controllers it is strongly recommended to find out the real values though the following procedure with your transmitter and receiver:

1) turn the transmitter on and move the throttle to max. position
2) turn the controller on
3) wait for 3 beeps
4) move the throttle to min. position
5) controller beeps once, you have entered the programming mode and the controller knows real min. and max. throttle position
6) turn the controller off (eventually transmitter also)

Now you may start programming using PC or UNICARD. When the controller is connected with the UNICARD or PC, all values will read from the controller together with real values of min. an max. throttle position of your RC set. If you now change any parameters (by mouse or by UNICARD) and save them in the controller they will be saved with the real values of min. and max. throttle position (you can see these values on the left side of "controller" window). It is now possible to program the controller using PC or UNICARD anytime without finding the real throttle min. and max. positions (steps 1 to 6) again.

If the procedure for finding real min. and max. throttle position is skipped before the first programming, „Controller" program (or UNICARD) will read out default throttle positions which are most likely not similar to those of your RC set. This may lead to two cases:

– first, the whole throttle range will not be used (real throttle range is bigger than default – case **a**)
– or second, which is worse, the controller will wait for the throttle to get to min. position which will not happen as the real value is bigger than the default one – case **b**) and it will seem that the controller is not working.

Procedure steps 1) to 6) are recommended to use if you change transmitter or its deflections are changed. It is also recommended for receiver changes – different receivers have different control pulse on channel output (for the same transmitter) !!!

a) Better case – whole throttle range not used

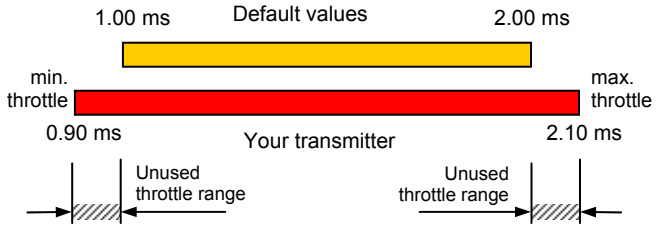

b) Worse case – controller will not start

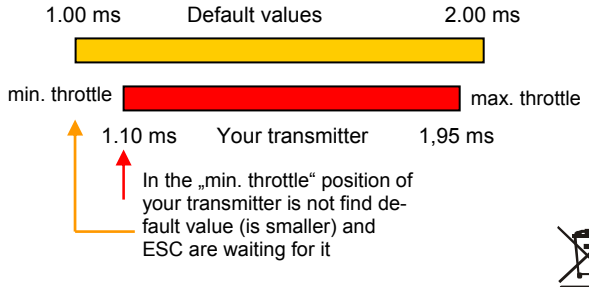

(The controller always waits after turning on for the throttle stick to get in min before starting – this is a safety precaution so that the throttle does not start unexpectedly)